Number	Part Number	Name	Quantity
2	27282	REAR BUMPER	1,000
3	27278	FRONT COVER	1,000
4	13138	LABEL AV88	1,000
5	27341	HEG.S.M8X20+WASHE	1,000
6	27293	BUSH 22X15X33F	1,000
7	27322	WASHER 10	1,000
8	27323	HEG.S.HM10X20+SPRIN	1,000
9	27300	-> 27902	1,000
10	9056	BOLT 8X25	1,000
11	2020	NUT HM8	1,000
12	27324	SNAP PIN 8	1,000
13	27315	STEP	1,000
14	27316	STEP RUBBER	1,000
15	27319	GRIP	1,000
16	27342	HEG.S. M8X16+WASHE	1,000
17	27321	SHAFT	1,000
18	27066	PIN	1,000
19	27288	SEAT BRACKET	1,000
21	13021	STICKER	1,000
22	27333	SEAT AV88	1,000
24	27429	SEAT RECEIVER	1,000
25	27302	SEAT RECEIVER LOWER	1,000
26	27326	SEAT SWITCH SPRING	1,000
28	27291	SEAT SPRING	1,000
30	27299	FLAT HEADED PIN 8X6	1,000
34	27318	WIND SHIELD	1,000
36	12047	STICKER ETESIA	1,000
37	12048	STICKER 26*4	1,000
38	13115	CUT.HEIGHT LABEL	1,000
39	13114	BLADE LABEL	1,000
40	27283	CUTTING HEIGT GUIDE	1,000
42	27287	HANDLE GRIP	1,000
43	27286	CUTTING HEIG.LEVER	1,000
44	27312	SPRING	1,000
45	27327	STUD	1,000
46	27331	WASHER 16X26X2,3	1,000
47	27281	ARM GRIP	1,000
48	27461	BLADE LEVER 88	1,000
49	27313	SNAP RING E TYPE 12	1,000
50	2235	WASHER A6.4	1,000
51	27337	SPLINT PIN 2X15	1,000

Number	Part Number	Name	Quantity
52	27205	CUTTING CLUTCH WIRE	1,000
53	34102	SPRING	1,000
54	27413	SCREW 8X25 + SPRING	1,000
55	5444	WASHER	1,000
56	27297	ADJUSTING SHAFT CPL	1,000
58	27204	CHOKE WIRE	1,000
59	13112	STICKER THROT.LEVER	1,000
60	13118	STARTER STICKER	1,000
61	13111	DIF.LOCK LABEL	1,000
62	13110	STICKER VARIATOR	1,000
63	27289	CHANGE GUIDE	1,000
65	27298	CONTROL LEVER SHAFT	1,000
66	27304	CTRL.SHAFT SPRING	1,000
67	27309	WASHER 12	1,000
68	27308	CONTROL WASHER	1,000
69	27201	THROTTLE LEVER	1,000
70	27203	THROTTLE WIRE	1,000
71	27305	CONTROL BRACKET	1,000
72	27284	DIFFEREN.LOCK PLATE	1,000
73	27285	CHANGE LEVER GRIP	1,000
74	27210	DIFFER.LOCK LEVER	1,000
77	27336	BUSH	1,000
78	27343	HEG.SCREW M8X30+WAS	1,000
80	27202	DIFFERE. LOCK WIRE	1,000
82	27307	SPRING	1,000
83	37997	SCREW HM6-16 8.8	1,000
84	34170	BRACK LOCK	1,000
86	9017	NUT HM10	1,000
88	27200	CHANGE LEVER	1,000
89	71049	SPRING WASHER,DIN 1	1,000
91	1541	HEXAGON NUT,DIN 934	1,000
92	71035	FLAT WASHER NFE 276	1,000
93	27310	SPRING WASHER H16	1,000
94	27335	WASHER 16X37X3,2	1,000
95	27311	VARIATOR LEVER BOSS	1,000
97	21036	FLAT WASHER 10.5	1,000
98	71031	LH HEXAG.SCREW,DIN	1,000
99	27206	ROD END HS 10 L	1,000
100	27328	NUT HM10 (LEFT)	1,000
101	27329	TURN BACKLE	1,000
102	27231	COUNTER NUT M10X150	1,000

Number	Part Number	Name	Quantity
103	27575	LINKING ROD N.M	1,000
105	27551	ROD END PHS10EC	1,000
106	21335	SCREW M10X40	1,000
108	27501	NUT FLANGE M8	1,000
109	13119	BY-PASS STICKER	1,000
110	27581	REAR COVER 88	1,000
112	27347	HEX. SCREW M6X14	1,000
113	71199	SCREW HM8X90	1,000
114	27295	FENDER RIGHT	1,000
115	27296	FENDER LEFT	1,000
118	27294	ENGINE BASE PLATE	1,000
120	27292	FUEL TANK SUPPORT	1,000
123	13139	STICKER AV 88	1,000
126	71201	NUT M6	1,000
127	27314	HARNESS CLIP	1,000
128	27512	REAR WHEEL BOSS	1,000
129	27348	GUIDE ROLLER	1,000
130	27520	BUSH MB 122 ODV	1,000
132	27350	PLATE	1,000
134	27344	RETURN SPRING	1,000
135	27246	GREASE NIPPEL	1,000

416.01 - AV88

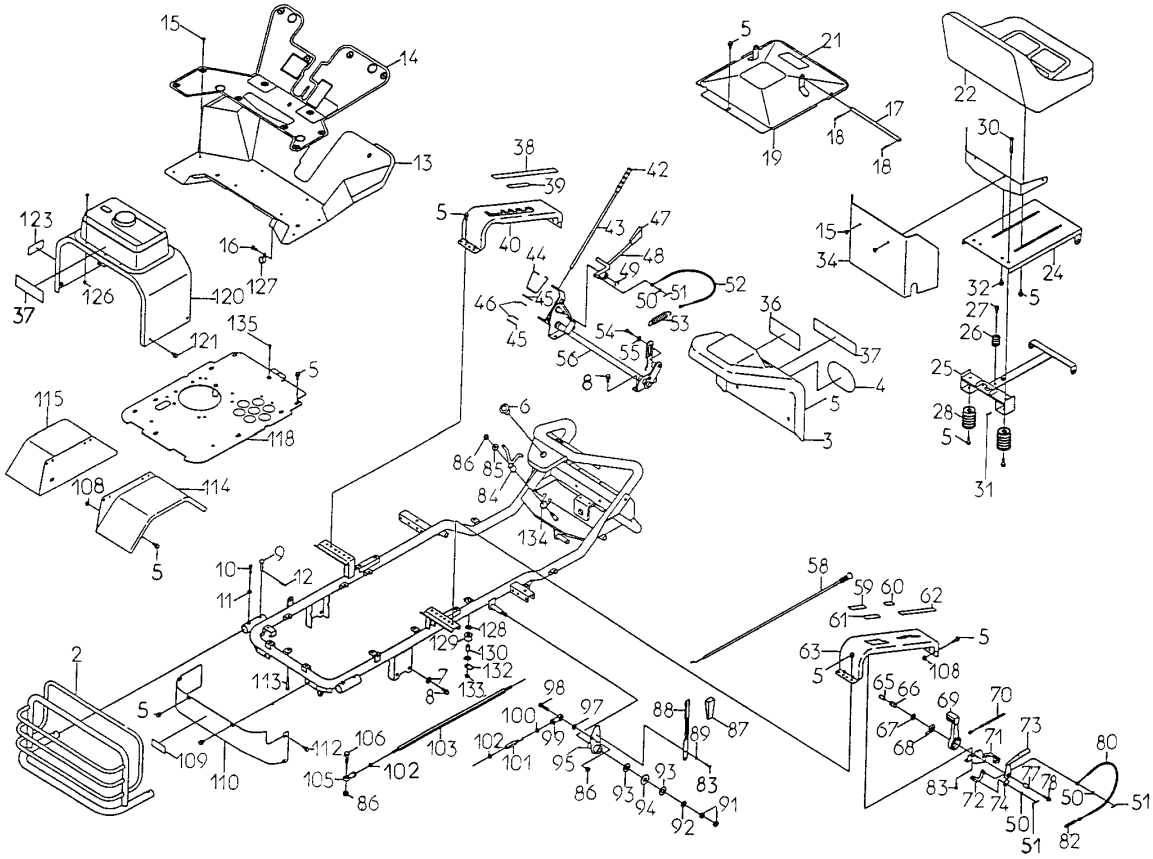
15
14
13
123
16
127
37
126
120
121
135
5
115
118
108
114
5
38
39
42
5
40
44
43
47
48
49
46
45
45
50
51
52
53
54
55
56
8
36
37
4
5
3
5
21
17
18
19
18
22
30
15
34
24
32
5
27
26
25
28
5
31
6
86
85
84
134
10
9
12
11
2
5
109
110
113
112
106
105
102
86
103
128
129
130
132
7
8
133
98
100
97
99
102
101
95
86
93
94
92
91
88
89
87
83
58
59
60
62
61
63
5
5
108
65
66
69
70
67
68
71
73
80
83
72
74
77
78
50
51
50
51
82

Number	Part Number	Name	Quantity
1	27554	SAFETY COVER	1,000
2	27396	KNIFE BELT COVER	1,000
3	13064	STICKER COLER OPEN	1,000
4	27416	BELT COVER SUPPORT	1,000
5	27341	HEG.S.M8X20+WASHE	1,000
6	27342	HEG.S. M8X16+WASHE	1,000
7	27409	SCREW M12X30	1,000
8	27353	SPRING WASHER A12	1,000
9	27410	WASHER 12X36X4,5	1,000
10	27400	KNIFE PULLEY	1,000
11	27254	OIL SEAL UE35.62.10	1,000
12	27397	SNAP RING 62	1,000
13	24832	BEARING 6007-2RS1	1,000
14	27573	BLADE SHAFT	1,000
15	27565	DUST COVER	1,000
16	27571	OIL SEAL VE40-62-12	1,000
17	27582	BLADE COUPLING 88	1,000
18	34194	PROTECTION	1,000
19	27332	BLADE BODY	1,000
22	27408	SPRING WASHER 20	1,000
23	34292	STOP NUT M20	1,000
24	27543	FIXING KIT MC85	1,000
25	MC85	SWING TIP KIT	1,000
31	27266	KNIFE COLLAR	1,000
33	27412	BELT GUIDE	1,000
34	71205	SCREW M8	1,000
35	71413	SCREW HM 8-20	1,000
36	27274	ARM FOR COVER RIGHT	1,000
37	27417	DEFLECTOR SCREW	1,000
38	15848	SPRING WASHER	1,000
40	27398	BRAKE ARM SUPPORT	1,000
41	27428	E TYPE RING 10	1,000
42	27564	SPRING	1,000
43	27415	WASHER 13X21X2,3	1,000
44	27256	KNIFE BRAKE	1,000
47	27066	PIN	1,000
48	27257	BRAKE ROD	1,000
49	2020	NUT HM8	1,000
50	27258	TURN BUCKLE M8X50	1,000
51	27411	NUT M8 LEFT HAND	1,000
52	27259	BRAKE ROD	1,000

Number	Part Number	Name	Quantity
53	34302	SCREW M6X15	1,000
54	27584	REAR GUARD FLAPPER	1,000
55	27585	REAR GUARD FLOPPER	1,000
56	27370	NUT FLANGE M6	1,000
57	27586	LEFT COVER	1,000
58	5043	NUT	1,000
60	7335	WASHER	1,000
62	27591	NUT M12	1,000
64	27592	BOLT FOR DEFLECTOR	1,000
66	27271	FLAPPER STOPPER R.	1,000
67	27270	FLAPPER FOR COVER R	1,000
69	27587	DEFLECTOR	1,000
70	27404	LINK FRONT	1,000
71	27405	LINK LEFT REAR	1,000
72	27403	LINK RIGHT REAR	1,000
73	27401	CONNECTING PLATE	1,000
74	27402	CONNECTING PLATE	1,000
75	27275	SPRING	1,000
76	27868	LINK PIN	1,000
77	1513	CIRCLIP 15	1,000
78	27938	SHAFT	1,000
79	71035	FLAT WASHER NFE 276	1,000
81	71157	NUT AUTOFR.HM12	1,000
83	27413	SCREW 8X25 + SPRING	1,000
84	27414	WASHER 8X30X3,2	1,000
86	13062	STICKER CUT-DECK	1,000
87	27944	RIGHT FRONT COVER	1,000
88	27590	LEFT FRONT COVER	1,000
89	28245	FLAP SPRING	1,000

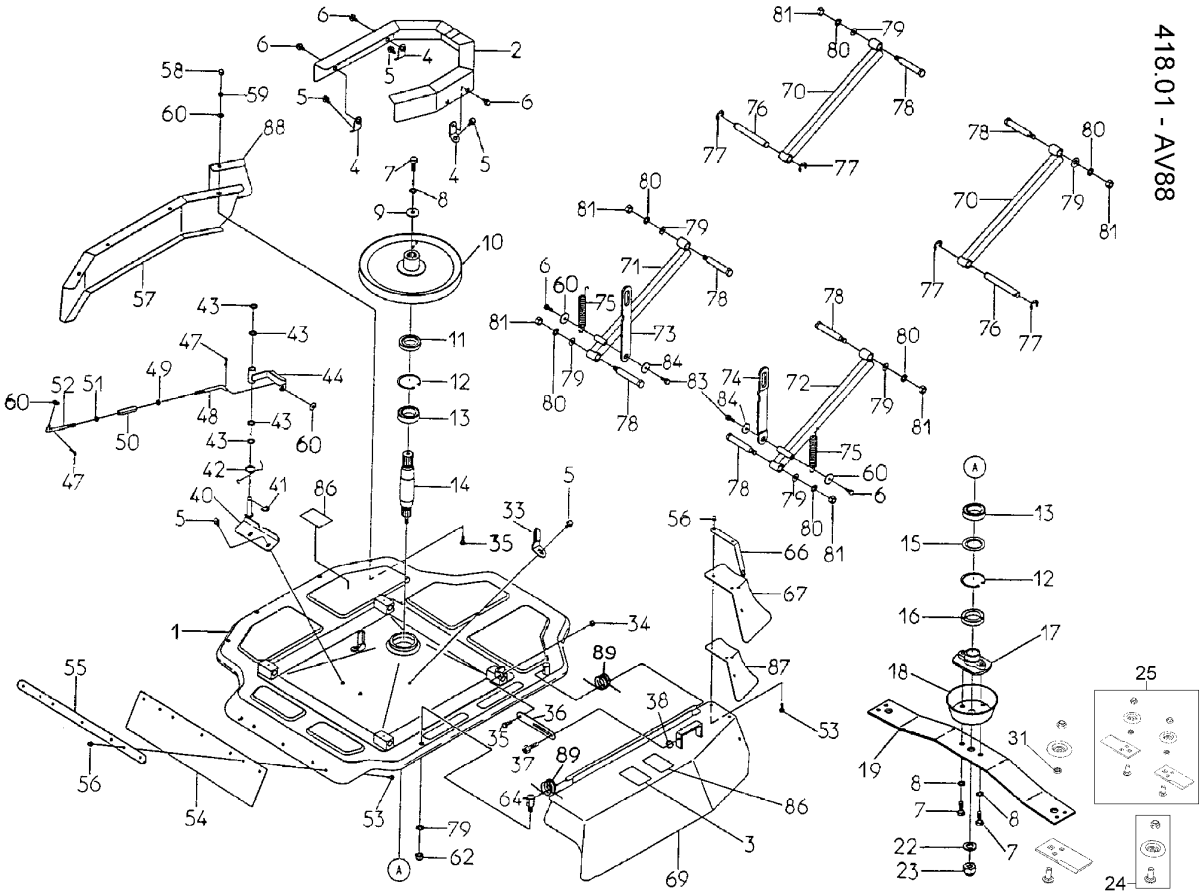
418.01 - AV88

Number	Part Number	Name	Quantity
1	-	-	1,000
2	27213	DU BUSH 25.25	1,000
3	27352	CENTER PIN	1,000
4	71035	FLAT WASHER NFE 276	1,000
5	27353	SPRING WASHER A12	1,000
6	71157	NUT AUTOFR.HM12	1,000
7	27643	KING PIN RIGHT	1,000
9	27356	WASHER 20X30X1	1,000
10	27214	DU BUSH	1,000
11	27357	COVER	1,000
12	27358	WASHER	1,000
13	27359	NIPPLE BOLT M14	1,000
14	27246	GREASE NIPPEL	1,000
15	7335	WASHER	1,000
16	6169	SCREW HM8X16	1,000
17	27235	FRONT WHEEL COVER	1,000
19	27236	LEFT FRONT WHEEL	1,000
20	27216	BLADE BELT	1,000
21	27217	BELT HP2SB32	1,000
22	27218	ENGINE PULLEY	1,000
23	27228	ENGINE COLLAR 26	1,000
24	27303	KEY	1,000
25	27361	WASHER 11X36X4,5	1,000
26	27553	SNAP RING 20	1,000
27	27362	SCREW UNF7/16-20X45	1,000
28	27363	BLADE BELT STOPPER	1,000
29	27364	WASHER 16X24X1	1,000
30	27365	SNAP RING 16	1,000
31	27366	DRIVING TENSION ARM	1,000
32	27374	SNAP RING 40	1,000
33	6058	BEARING 62032RS	1,000
34	27221	TENSION PULLEY	1,000
35	27376	SNAP RING 17	1,000
36	27222	TENS.SPRING	1,000
37	27231	COUNTER NUT M10X150	1,000
38	27378	TENSION SPRING ARM	1,000
39	70086	HEXAGON SCREW,DIN 9	1,000
40	21114	BOLT 8X40	1,000
41	27501	NUT FLANGE M8	1,000
42	27379	COVER	1,000
43	27380	SPRING 55	1,000

Number	Part Number	Name	Quantity
44	27381	TRUNNION	1,000
45	2235	WASHER A6.4	1,000
46	71201	NUT M6	1,000
47	2020	NUT HM8	1,000
48	27386	BRAKE ROD	1,000
49	71205	SCREW M8	1,000
50	27610	RETURN SPRING	1,000
52	27383	AXLE	1,000
53	27323	HEG.S.HM10X20+SPRIN	1,000
55	27384	SPRING	1,000
56	27224	PEDAL RUBBER	1,000
57	27388	BRAKE PEDAL	1,000
59	27566	SNAP RING 12	1,000
60	1513	CIRCLIP 15	1,000
62	27391	RETURN SPRING	1,000
64	7038	SCREW,DIN933 H M 8X	1,000
65	27426	KNIFE TENSION ARM	1,000
67	71052	SPRING WASHER,DIN 1	1,000
68	21036	FLAT WASHER 10.5	1,000
70	34100	TENSIO.PULLEY SHAFT	1,000
71	27226	RUBBER COVER 58	1,000
72	27227	KNIF.TENS.PULLEY	1,000
73	25112	BALL BEARING,6202 S	1,000
74	71039	CIRCLIP,DIN 427 35X	1,000
75	71047	CIRCLIP DIN 471 15X	1,000
76	27433	STEERING CAP	1,000
77	9017	NUT HM10	1,000
78	27320	WASHER 10	1,000
79	27430	STEERING WHEEL	1,000
80	27425	STEERING WHEEL	1,000
82	27420	STEERING BELLOW	1,000
83	27421	UPPER STEER.SHAFT	1,000
84	71259	SCREW HM6X35	1,000
87	71413	SCREW HM 8-20	1,000
88	20606	KEY 5X5X20	1,000
89	27423	BEARING COVER	1,000
90	25330	BADGE - ETESIA	1,000
91	5043	NUT	1,000
92	15848	SPRING WASHER	1,000
94	71199	SCREW HM8X90	1,000
95	27611	STEER.GEARBOX ASSY	1,000

Number	Part Number	Name	Quantity
96	27229	STEERING BRACKET	1,000
102	27414	WASHER 8X30X3,2	1,000
103	71068	HEXAGON SCREW,DIN 9	1,000
104	27562	M8X16+SPRING WASH.	1,000
105	27230	STEERING BOOTS	1,000
106	27232	RACK SUPPORT	1,000
108	27561	-> 34284	1,000
109	27209	LOK NUT M10X125	1,000
110	27577	BALL LHSA10DE21-125	1,000
111	27578	COUNTERNUT M10X125	1,000
112	27576	ROD ADJUST. M10X125	1,000
113	27579	COUNTERNUT M10X125L	1,000
114	27580	BALL LHSA10D21-125L	1,000
115	27360	GREASE NIPPEL M 6	1,000
116	71031	LH HEXAG.SCREW,DIN	1,000
117	27557	FRONTGUARD	1,000
118	27245	FRONT FLAPPER	1,000
119	27558	SCREW M6X20+SPRING	1,000
124	27555	REAR WHEEL COVER	1,000
125	27238	DUST COVER	1,000
126	27556	KEY 7X50	1,000
127	27614	REAR WHEEL BOSS	1,000
128	27239	LEFT REAR WHEEL	1,000
130	27437	WASHER 16X40X4,5	1,000
131	27436	SPRING WASHER	1,000
132	27435	NUT M16	1,000
133	27327	STUD	1,000
134	27342	HEG.S. M8X16+WASHE	1,000
135	27644	KING PIN RIGHT	1,000
139	27613	-> 27930	1,000
140	27612	DU BUSH 16-25	1,000
150	27237	RIGHT FRONT WHEEL	1,000
151	27244	RIGHT REAR WHEEL	1,000
152	27616	KING PIN LEFT	1,000
160	27615	KING PIN LEFT	1,000
183	27377	FRONT TYRE	1,000
184	27375	REAR TYRE	1,000
185	27387	INNER O AIR TUBE FR	1,000
186	28353	INNER TUBE REAR	1,000
187	27393	FRONT RIM	1,000
188	27394	REAR WHEEL	1,000

Number	Part Number	Name	Quantity
189	28461	TYRES LIQUID SEAL	1,000

420.01 - AV88

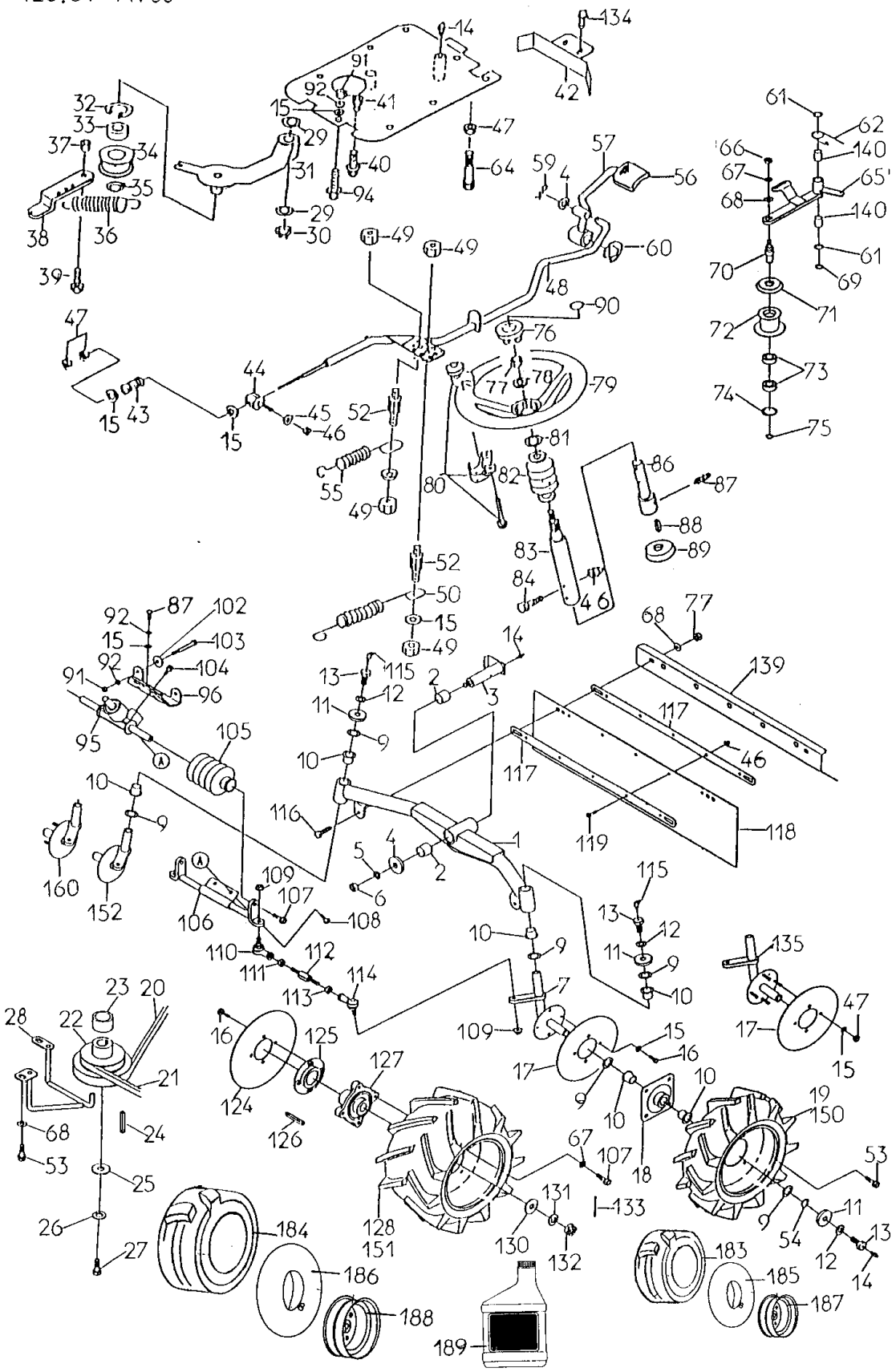
14
134
42
91
92
41
15
29
31
40
94
47
64
32
33
37
34
35
38
36
39
57
59
4
56
61
62
140
66
67
65'
68
140
61
69
70
71
72
73
74
75
49
49
60
48
90
76
47
44
43
15
45
46
52
77
78
79
81
86
87
88
89
55
49
80
82
83
84
46
52
50
15
49
14
68
77
139
117
46
118
119
117
92
87
102
15
103
92
104
91
96
95
105
13
115
12
11
9
10
2
3
116
1
5
4
2
6
109
107
108
106
110
112
111
114
113
7
10
9
115
13
12
11
9
10
135
47
17
15
160
152
10
9
23
20
28
22
21
16
125
127
124
126
109
15
16
17
9
10
10
19
150
68
24
53
25
26
27
67
107
18
53
131
133
11
13
54
12
14
128
151
130
132
184
186
188
189
183
185
187

Number	Part Number	Name	Quantity
1	15942	FUEL TANK	1,000
2	15943	STRAINER	1,000
3	15944	FUEL GAUGE	1,000
4	15945	SCREW	1,000
5	15946	SPRING	1,000
6	15427	SCREW	1,000
7	15947	GASKET	1,000
8	15948	TANKCAP COMPLETE	1,000

414.01 AV85-88

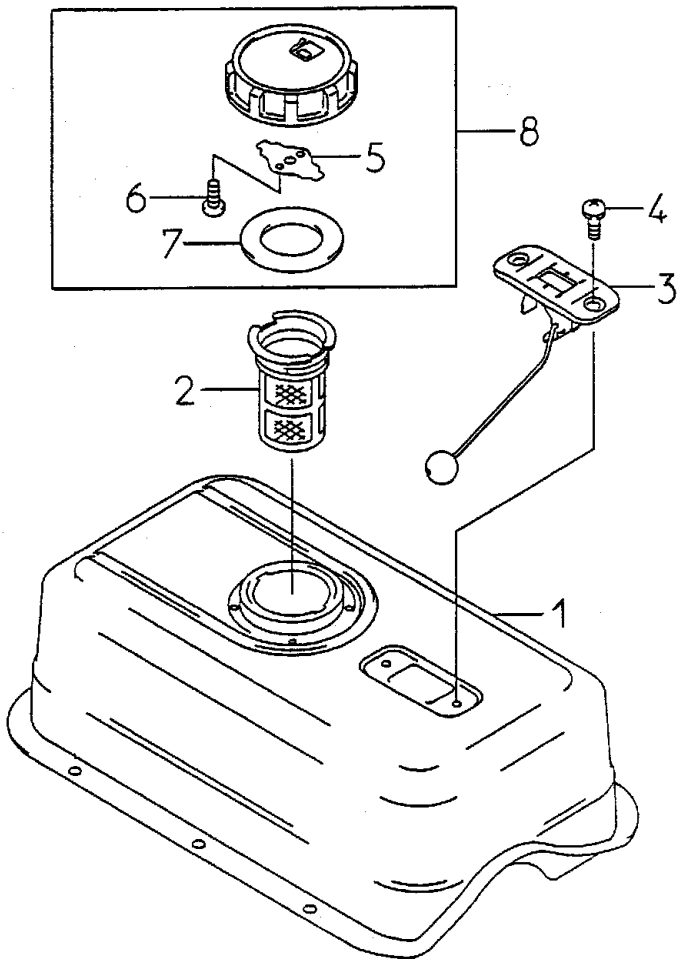

Number	Part Number	Name	Quantity
1	27526	FUEL COCK BRACKET	1,000
2	27342	HEG.S. M8X16+WASHE	1,000
3	27527	FUEL COCK	1,000
4	71035	FLAT WASHER NFE 276	1,000
5	27242	COUNTER NUT M12X125	1,000
6	15843	CLAMP	1,000
7	27528	DRAIN HOSE	1,000
8	27529	DRAIN HOSE	1,000
9	71289	H.SCREW M10X100 8,8	1,000
10	21036	FLAT WASHER 10.5	1,000
11	27530	PLATE FIXING MUFFLE	1,000
12	71103	UNC M DIA. 1/4" SCR	1,000
13	27531	PIPE FIXING MUFFLER	1,000
14	27231	COUNTER NUT M10X150	1,000
15	27532	EXHAUST ADAPTER	1,000
16	71052	SPRING WASHER,DIN 1	1,000
20	27691	WASTE OIL TAP	1,000

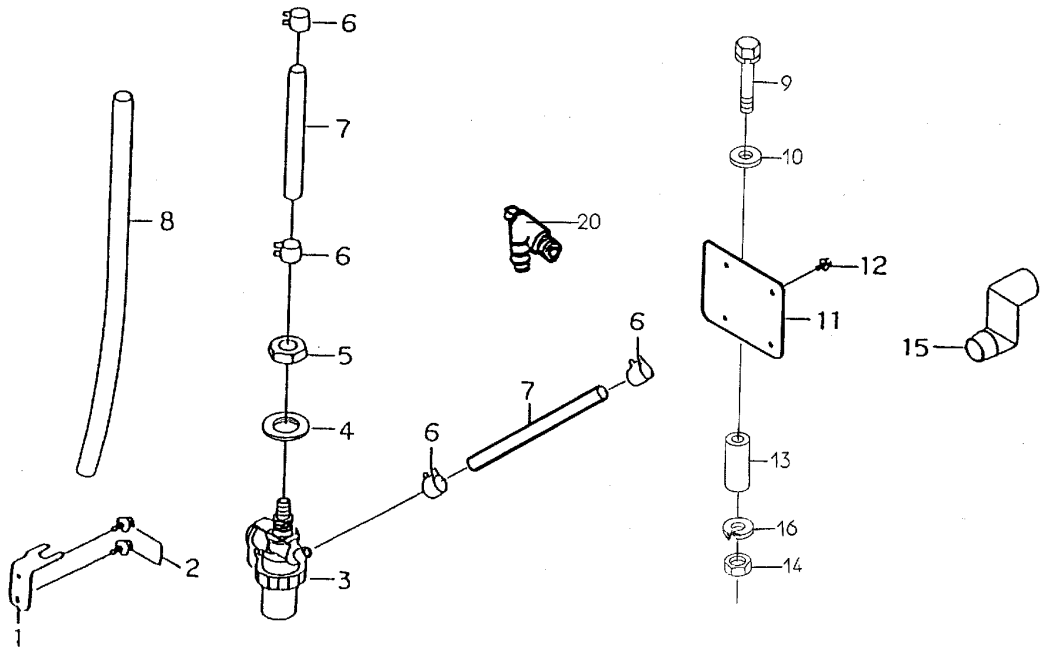

412.01 AV85-88

Number	Part Number	Name	Quantity
1	27516	BATTERY CARRIER	1,000
2	27517	CUSHION RUBBER	1,000
3	25800	-> 100217	1,000
4	27518	CODE (+)	1,000
5	27519	CODE (-) 235	1,000
6	71049	SPRING WASHER,DIN 1	1,000
7	1557	NUT HM6	1,000
8	20693	HEX.SCREW HM6X25	1,000
9	71255	SCREW TH M6X14	1,000
10	2235	WASHER A6.4	1,000
11	37997	SCREW HM6-16 8.8	1,000
12	27559	BATTERY SCREW M6	1,000
13	-	-	1,000
14	27247	RELAY	1,000
15	27241	MAGNETIC SWITCH	1,000
16	27341	HEG.S.M8X20+WASHE	1,000
17	27521	PLATE FIXING SWITCH	1,000
18	34103	KEY SWITCH+2 KEYS	1,000
19	27522	SWITCH BRACKET	1,000
20	13121	LABEL KEY	1,000
22	27523	SEAT SWITCH	1,000
23	27249	SAFETY SWITCH	1,000
24	27250	WIRE HARNESS	1,000
25	27524	RELAY SUPPORT	1,000
26	6169	SCREW HM8X16	1,000
27	27501	NUT FLANGE M8	1,000
29	34302	SCREW M6X15	1,000
30	27314	HARNESS CLIP	1,000
31	13113	STICKER	1,000
32	27607	WIRE HARNESS HOUR M	1,000
33	27608	HOUR METER	1,000
34	27609	HOUR METER BRACKET	1,000
40	27606	HOUR METER KIT	1,000
41	27317	CONTACTOR KEY	1,000

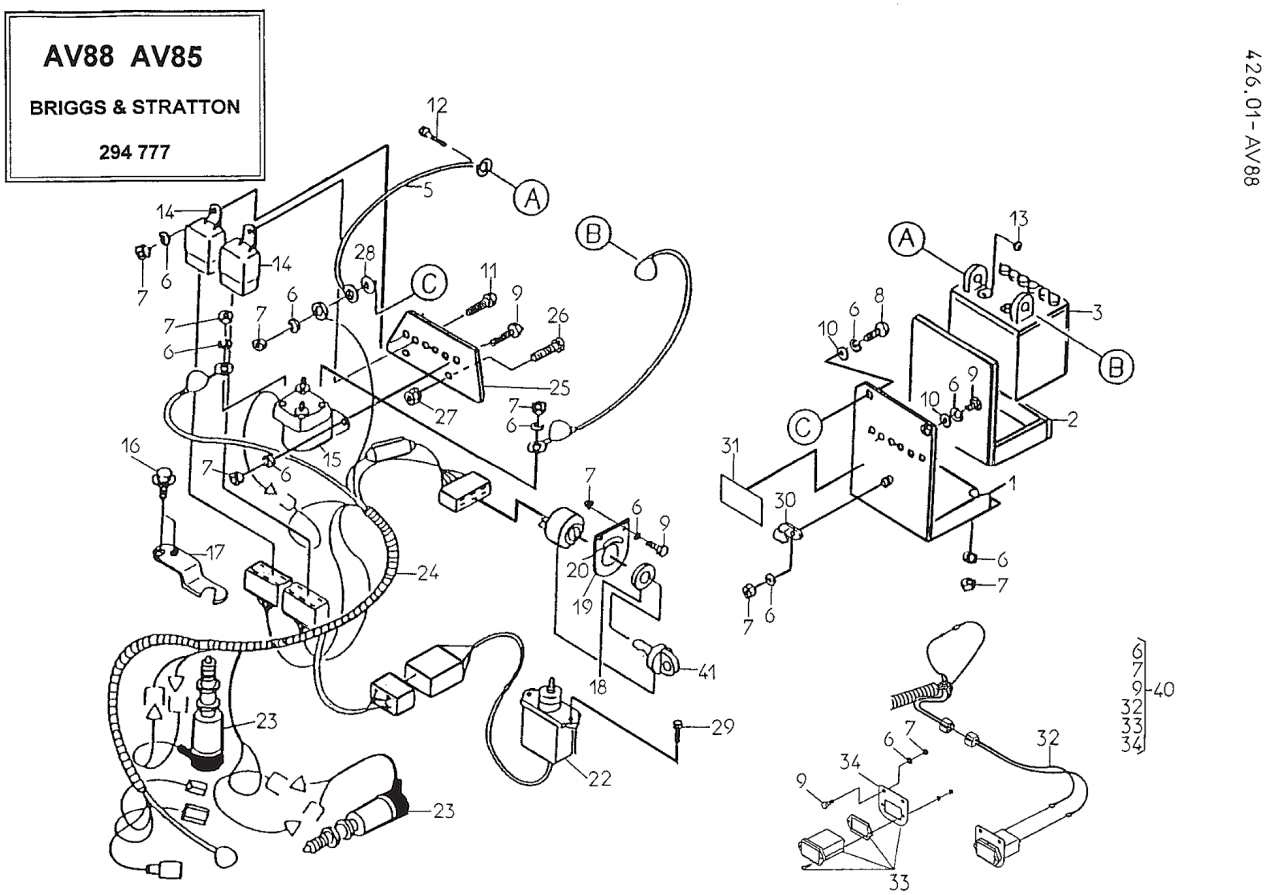
AV88 AV85
BRIGGS & STRATTON
294 777
426.01-AV88