DEB 518 Bush hog mower



Documents

Frame

Front wheels

Transmission

Handlebar

Rear wheels

Copyright EMAK UK

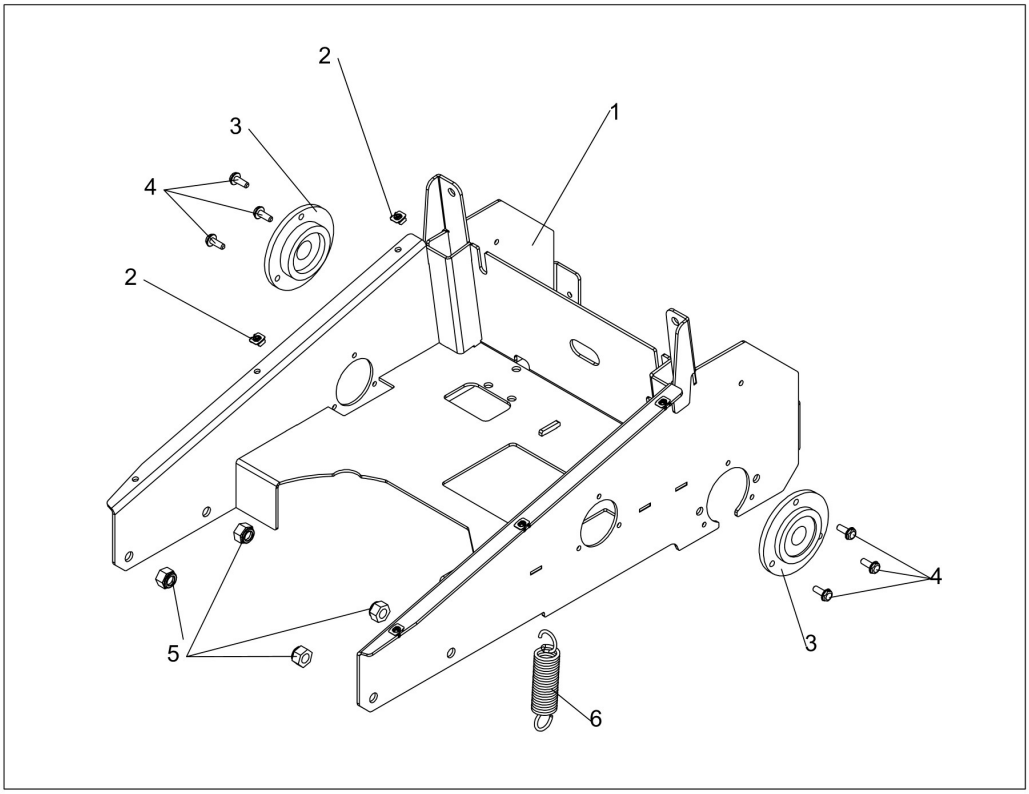

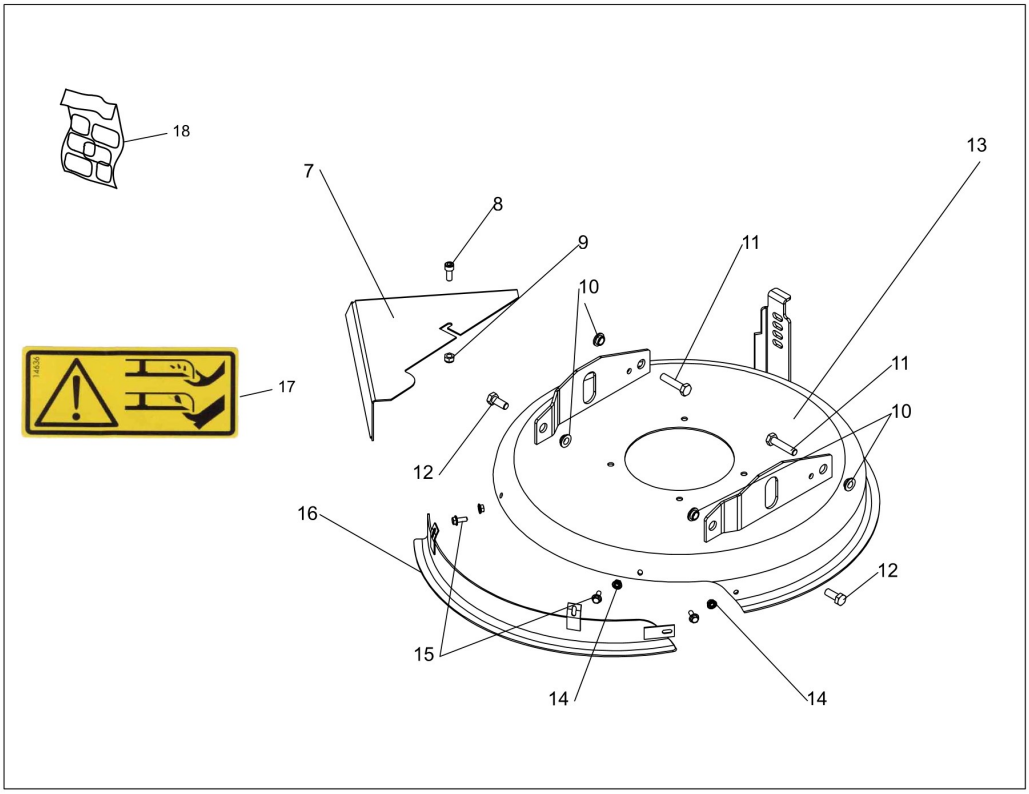

Copyright EMAK UK

Ref.Nu	Qty	Part number	Description	Validity from	Validity till	Notes	Bulletin
1	1	PB4002092404R	Deck				
2	2	PB0301050005	Clip				
3	2	PB0340030013	Wheel shaft bearing				
4	6	PB0300090602	Screw				
5	4	PB0300211001	Nut				
6	1	PB0305010009	Spring				
7	1	PB4002000516R	Deflector				
8	1	PB0300020804	Screw				
9	1	PB0300210802	Nut				
10	4	PB0302020224	Spacer				
11	2	PB0300011005	Screw				
12	2	PB0300011008	Screw				
13	1	PB4002060503R	Cover				
14	3	PB0300260601	Nut				
15	3	PB0300010609	Screw				
16	1	PB4002000505	Deflector				
17	1	PB0503000006	Label				
18	1	68210017	Labels kit				

Copyright EMAK UK

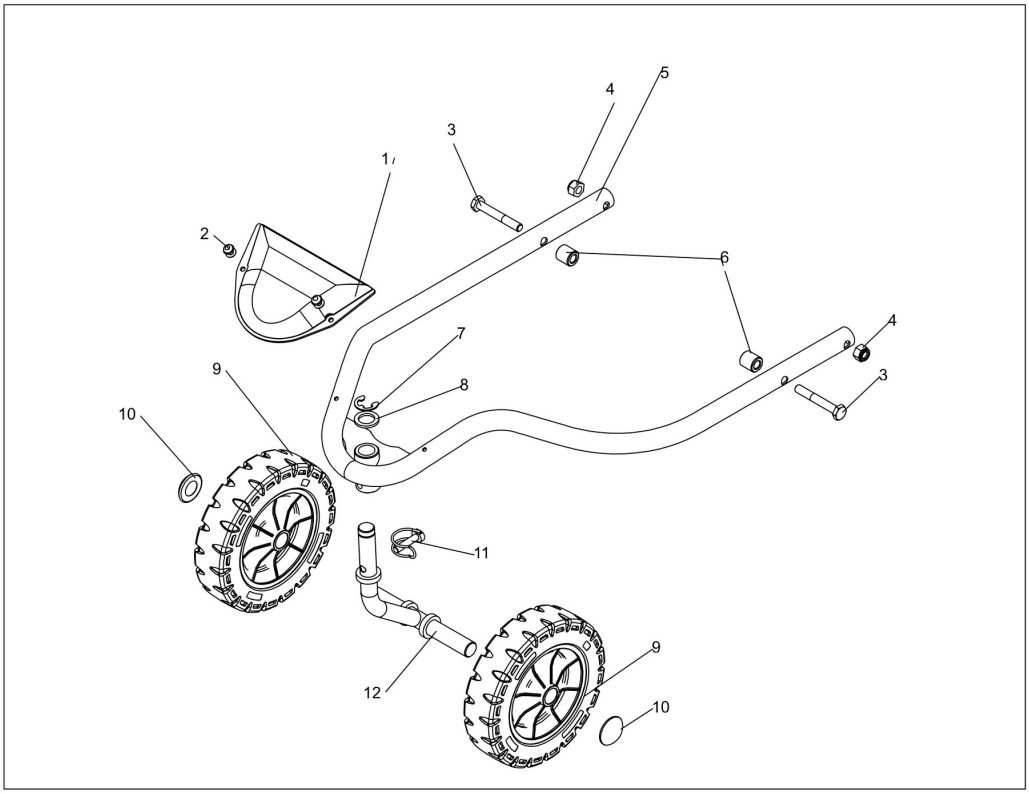

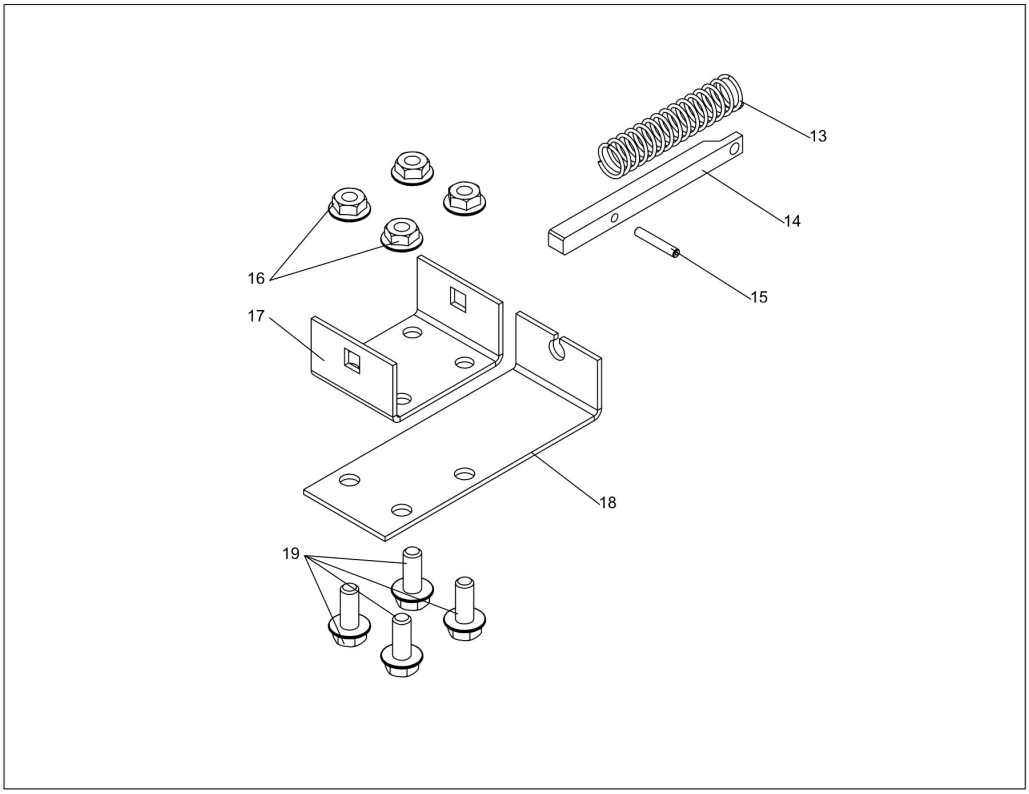

Copyright EMAK UK

Illustration Front wheels

Ref.Nu	Qty	Part number	Description	Validity from	Validity till	Notes	Bulletin
1	1	PB0340030053R	Hood				
2	2	PB0300500501	Rivet				
3	2	PB0300011011	Screw				
4	2	PB0300211001	Nut				
5	1	PB4002090303	Front chassis				
6	2	PB0340030010	Spacer				
7	1	PB0301070043R	Clip				
8	1	PB0300402005R	Cup washer				
9	2	PB0309000033	Wheel				
10	2	PB0300702001	Hub cap				
11	1	PB0301010013	Plug				
12	1	PB4002000314R	Support				
13	1	PB0305020001	Spring				
14	1	PB0302010030	Axel lift				
15	1	PB0301020002	Plug				
16	4	PB0300260801	Nut				
17	1	PB4002000102	Locking pin support				
18	1	PB4002040104	Support				
19	4	PB0300010816	Screw				

Copyright EMAK UK

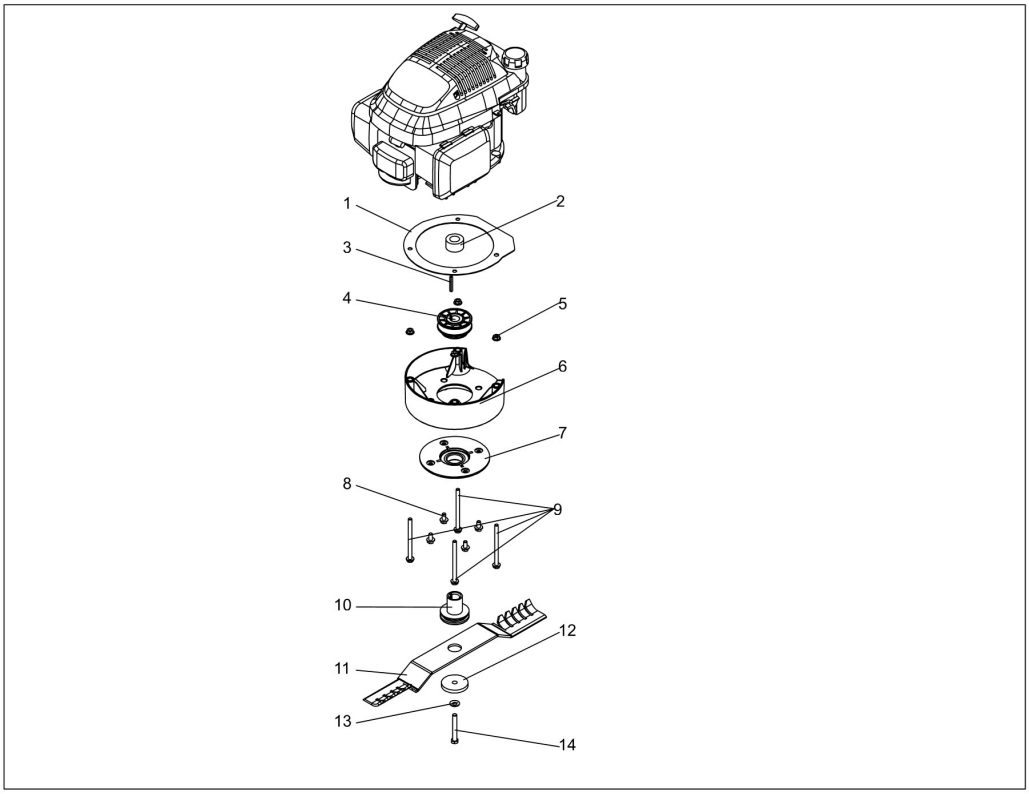

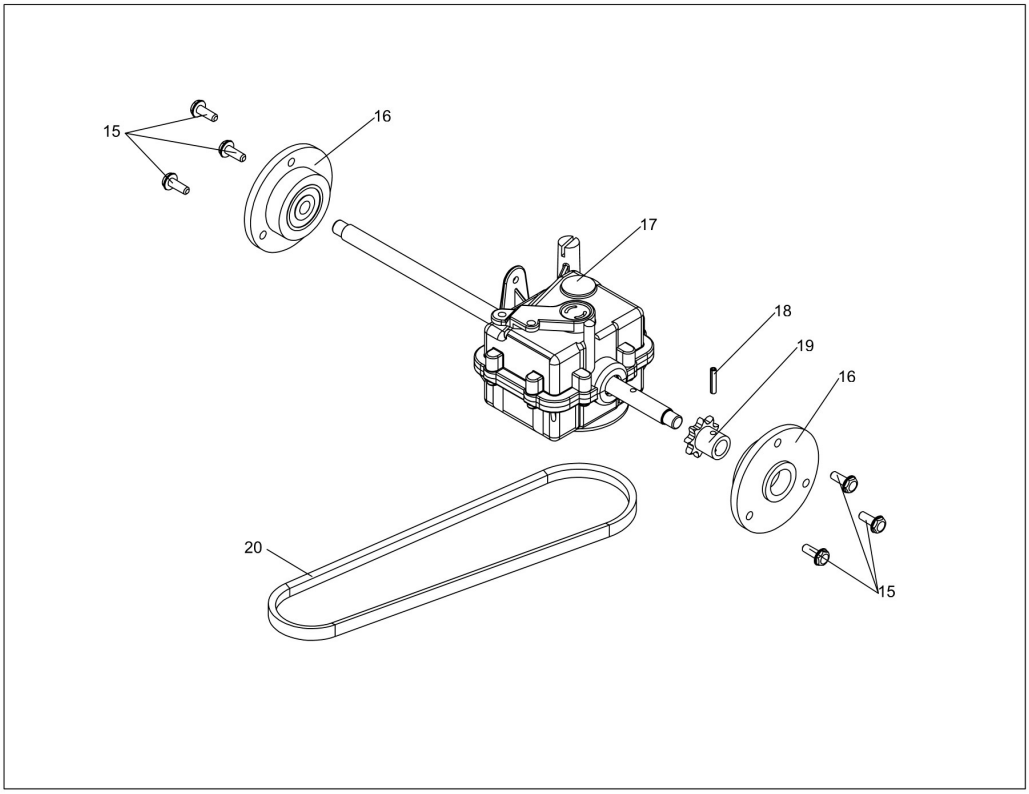

Copyright EMAK UK

Ref.Nu	Qty	Part number	Description	Validity from	Validity till	Notes	Bulletin
1	1	PB0304000313	Engine chock				
2	1	PB0302020046	Spacer				
3	1	PB0301040001	Key				
4	1	PB0306060014	Variable engine pulley				
5	3	PB0300260801	Nut				
6	1	PB0340030034	Plastic chock				
7	1	PB0340030028R	Bearing				
8	4	PB0300010815	Screw				
9	4	PB0300010856	Screw				
10	1	PB0302030047R	Hub				
11	1	PB0320020006R	Blade				
12	1	PB0302020042	Washer				
13	1	PB0300431001	Washer				
14	1	PB0300060304	Screw				
15	6	PB0300090602	Screw				
16	2	PB0340030012	Countershaft bearing				
17	1	PB0306040012	Reduction gear				
18	1	PB0301020001	Plug				
19	1	PB0306050028	Sprocket 9 teeth				
20	1	PB0306030048	Harness				

Copyright EMAK UK

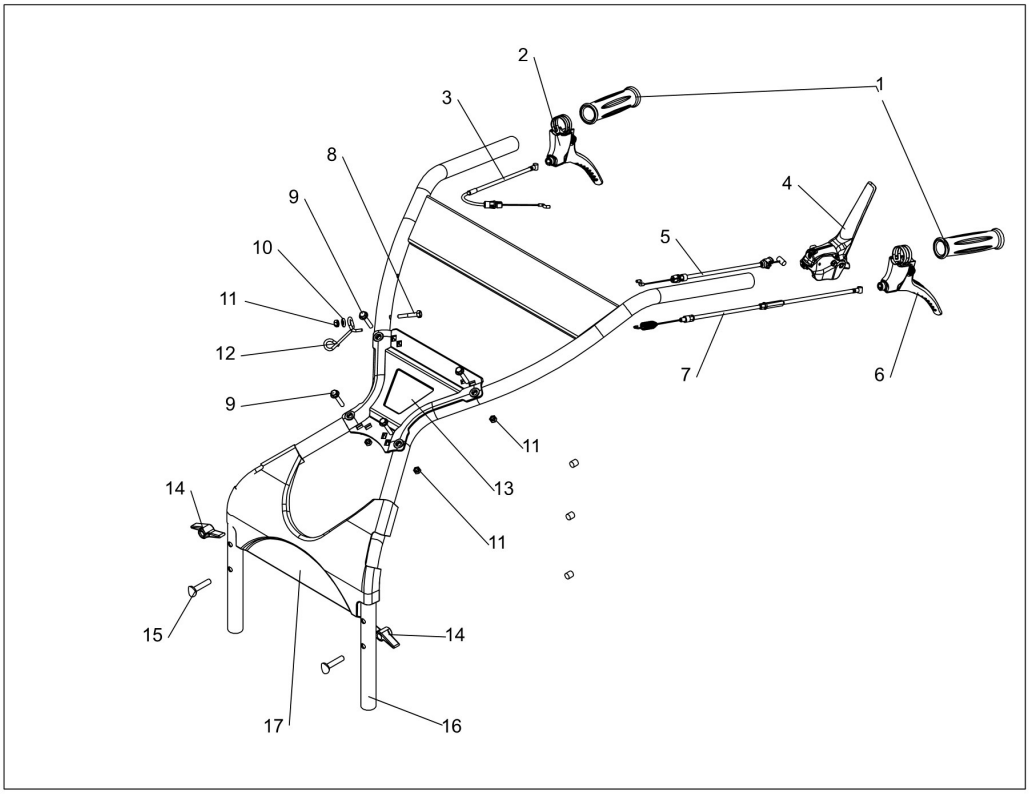

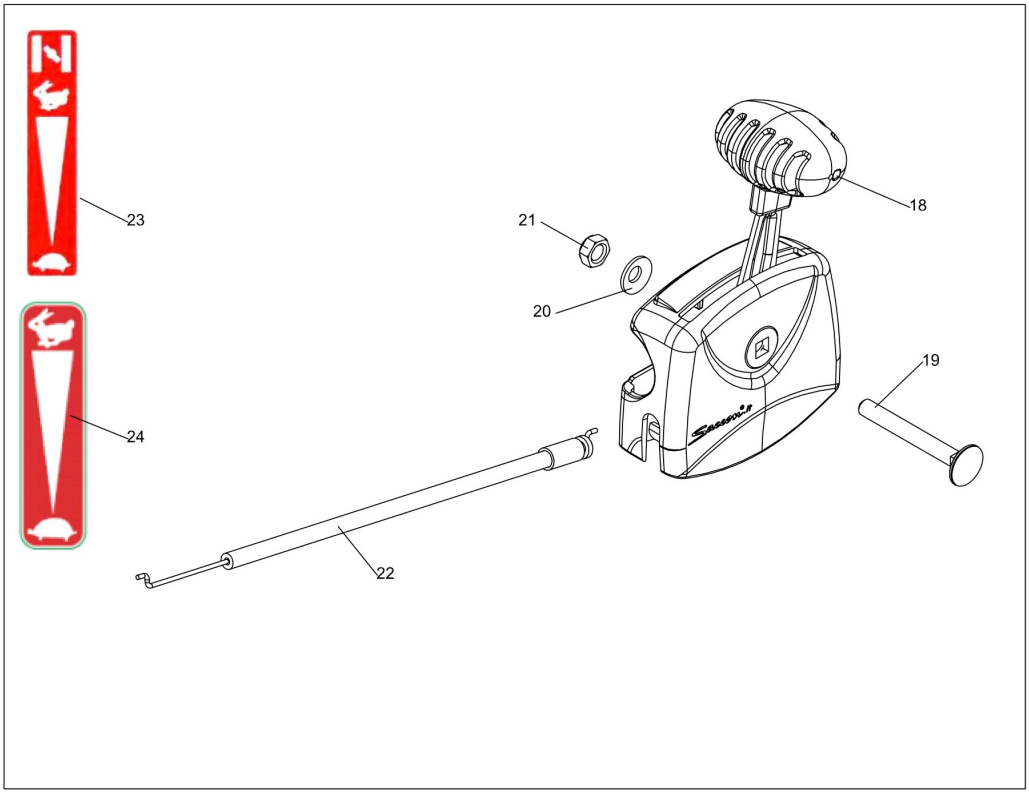

Copyright EMAK UK

Illustration Handlebar

Ref.Nu	Qty	Part number	Description	Validity from	Validity till	Notes	Bulletin
1	2	PB0341000036	Plastic handle				
2	1	PB0307010073R	Lever				
3	1	PB0308030008R	Height adjustment cable				
4	1	PB0307010072R	Compl.brake lever				
5	1	PB0308050015	Brake cable				
6	1	PB0307010035R	Lever				
7	1	PB0308020062	Clutch cable				
8	1	PB0300010604	Screw				
9	4	PB0300010621	Screw				
10	1	PB0300430601	Washer				
11	5	PB0300210602	Nut				
12	1	PB0305030001	Hooking spring				
13	1	PB0340030049	Clamp				
14	2	PB0300800004R	Adjustment wheel				
15	2	PB0300090802	Screw				
16	1	PB4002090302R	Handlebar				
16	1	PB0503010190R	Label				
17	1	PB0340030055R	Lower hood				
18	1	PB0307020023	Gas lever				
19	1	PB0300080611	Screw				
20	1	PB0300430601	Washer				
21	1	PB0300210602	Nut				
22	1	PB0308040050	Throttle cable				
23	1	PB0503000044	Label				
24	1	PB0503000043	Label				

Copyright EMAK UK

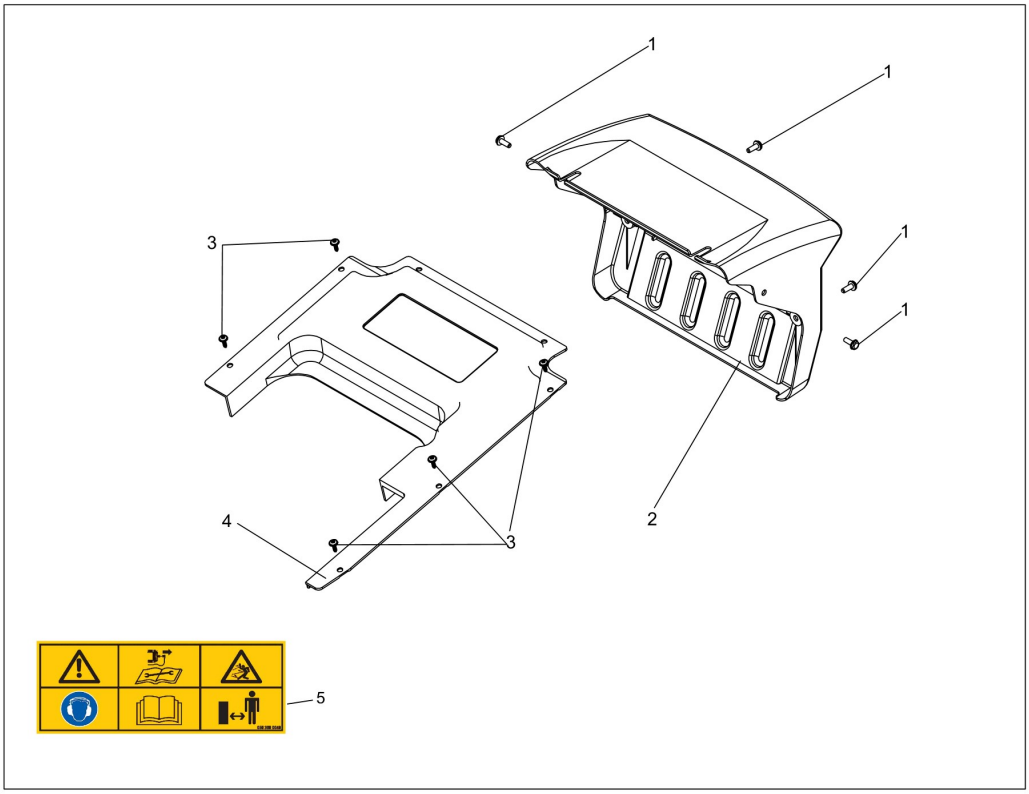

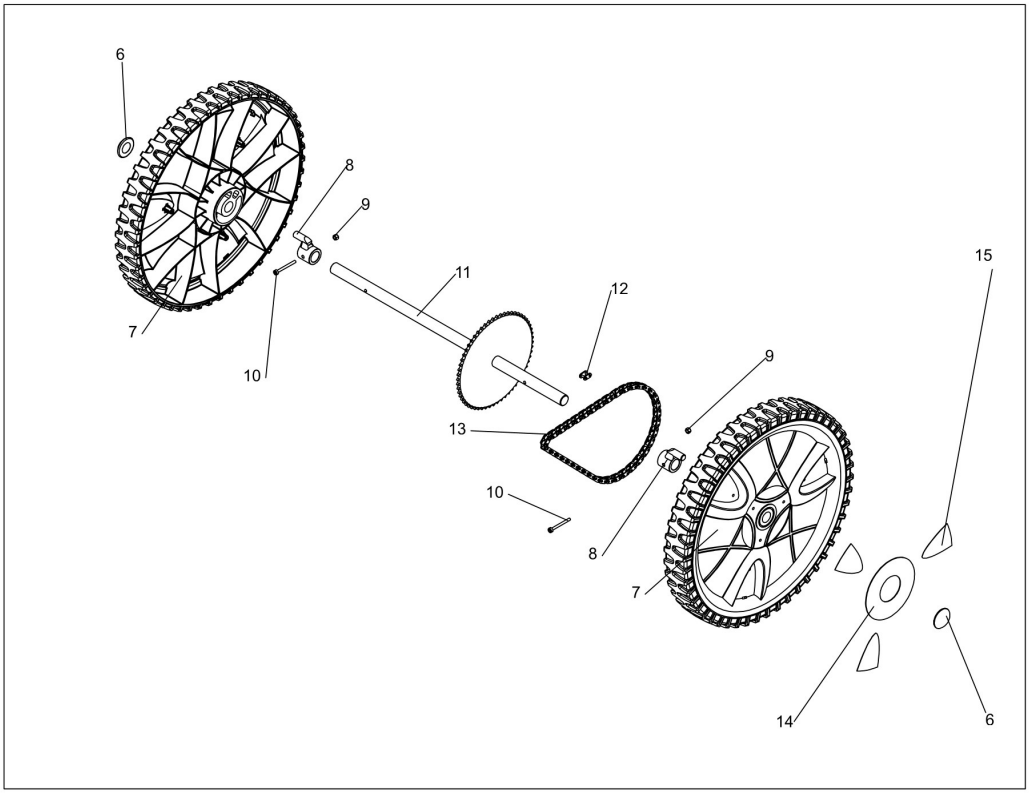

Copyright EMAK UK

Illustration Rear wheels

Ref.Nu	Qty	Part number	Description	Validity from	Validity till	Notes	Bulletin
1	4	PB0300090602	Screw				
2	1	PB0340030057R	Rear hood				
3	5	PB0300070405	Screw				
4	1	PB0340030001R	Engine hood				
5	1	PB0503000049	Label				
6	2	PB0300702001	Hub cap				
7	2	68210002	Wheel kit				
8	2	PB0302030014	Wheel hub				
9	2	PB0300210502R	Nut				
10	2	PB0300020504R	Screw				
11	1	PB0306050115R	Rotor shaft				
12	1	PB0306020001	Quick fastener				
13	1	PB0306020020R	Chain				
14	2	PB0503010333R	Label				
15	6	PB0503010332R	Label				

Copyright EMAK UK