BRAKE ASS'Y	*Date :* 01. Dec, 2011	*Revision :* 02	*Page:* 1/1
Product code : 71067-106		*Model :*	

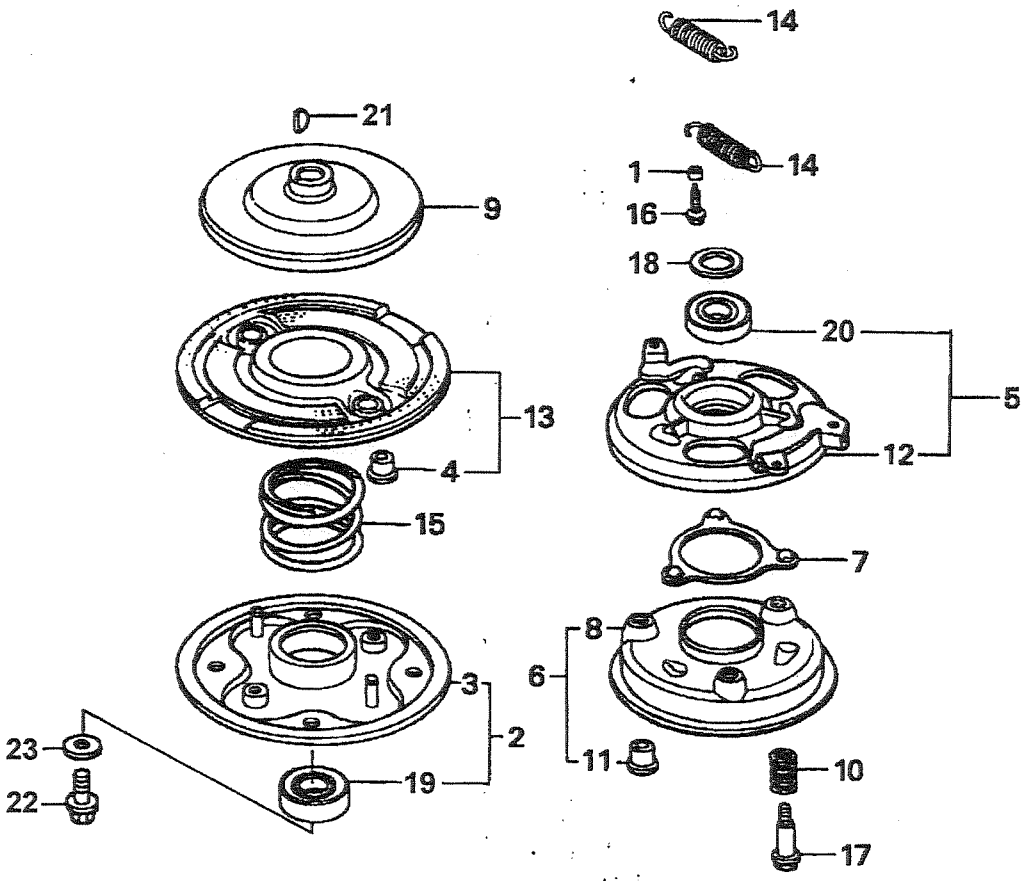

BRAKE ASS'Y

Brand:
P.cd: 71067-106

Date: 1-Dec-2011
Revision: 02

(A): 71067-106
(B):
(C):

Ref.No	Parts.No	Parts.Name	Q'ty (A)	Q'ty (B)	Q'ty (C)	Remarks	Recomm(%) Lot.100
	71067-106	BRAKE ASS'Y	1				
1	19512-883-000	COLLAR, FAN	2				
2	72600-VA4-010	HOLDER ASS'Y, BLADE	1				
3	72610-VA4-000	HOLDER COMP., BLADE	1				
4	72613-VA4-000	BUSH, BLADE HOLDER	2				
5	75090-VA4-030	PLATE ASSY., BALL CONTROL	1				
6	75100-VA4-010	BRAKE COMP.	1				
7	75110-VA4-000	RETAINER COMP., BALL	1				
8	75120-VA4-010	DISK, BRAKE	1				
9	75130-VA4-000	DISK, DRIVE	1				
10	75132-VA4-000	SPRING, BRAKE HOLDER	3				
11	75133-VA4-000	BUSH, BRAKE HOLDER	3				
12	75140-VA4-020	PLATE COMP., BALL CONTROL	1				
13	75150-VA3-J01	DISK COMP., DRIVEN	1				
14	75182-VA3-J00	SPRING, CLUTCH RETURN (53.0M	2				
15	75183-VA3-J00	SPRING, CLUTCH (36.6MM)	1				
16	90014-952-000	BOLT, FLANGE, 6X14(CT200)	4				
17	90021-VA4-000	BOLT, SPECIAL, 6MM	3				
18	90501-952-010	WASHER, THRUST	1				
19	91102-VA4-013	BEARING, RADIAL BALL, 6204	1				
20	91103-VA4-003	BEARING, RADIAL BALL, 60/22	1				
21	94401-16150	KEY, WOODRUFF, 16X15	1				
22	90105-960-003	BOLT, HEX., 10X25	1				
23	90409-952-000	WASHER, 10MM	1				

GRASS-CUTTING-ROLLER-PRO	*Date :* 1 Mar. 2024	*Revision :* 00	*Page :* 1/1
Brand : KAAZ	*Model :* LM5360HXARD-PRO-HS	*Product Code :* 620677	

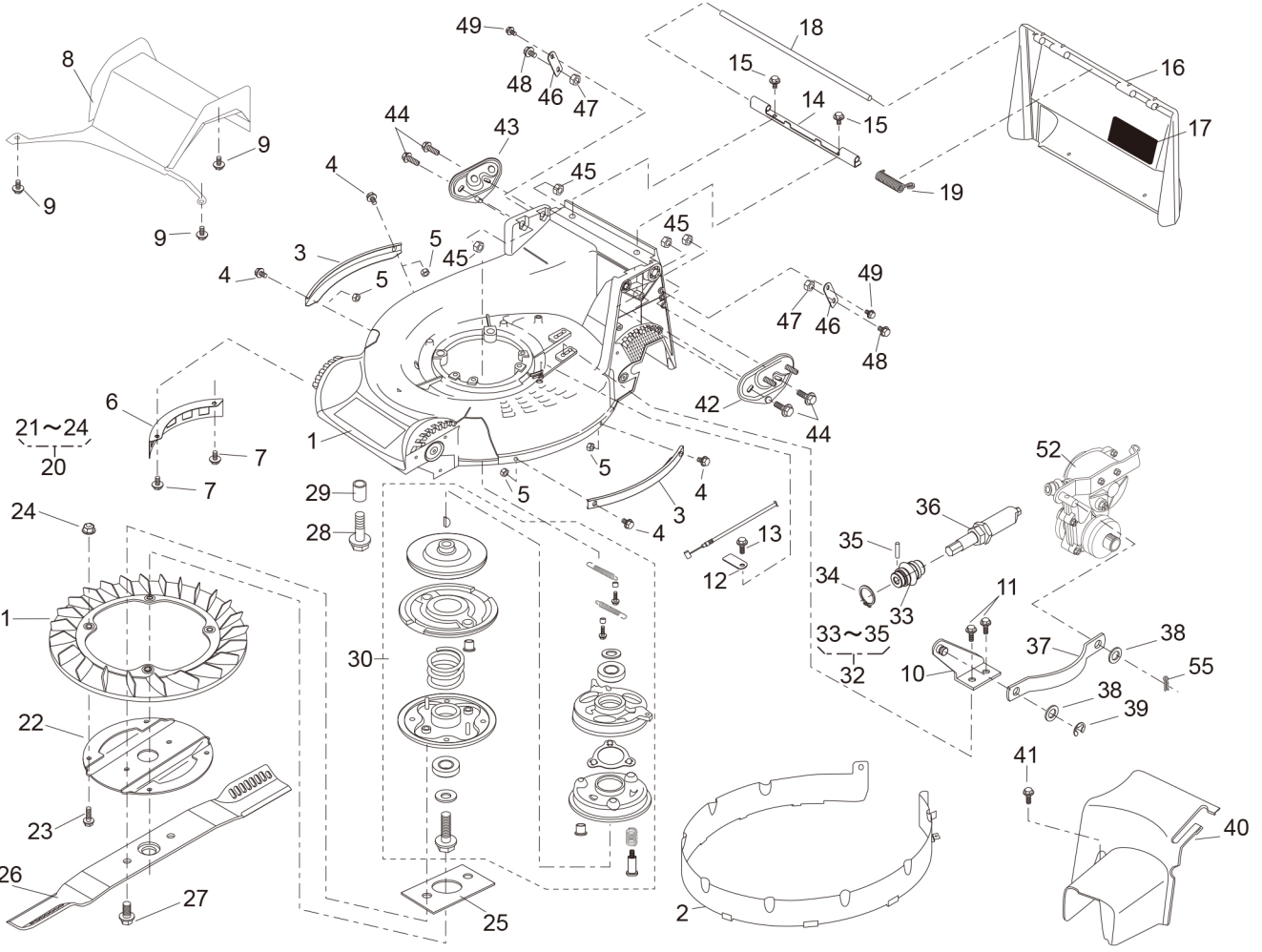

GRASS-CUTTING-ROLLER-PRO LM5360HXARD-PRO-HS

Brand: KAAZ Date: 1-Mar-2024

P.cd: 620677 Revision: 00

Ref.No	Parts.No	Parts.Name	Q'ty	Remarks
1	51043-151-42	HOUSING	1	
2	36068-204	GUARD	1	
3	51090-117-09	PROTECTOR	2	
4	335L0616	FLANGE BOLT	4	
5	512L0600	HEXAGON NUT	4	
6	36065-180	COVER	1	
7	342L0612	FLANGE TAPPING BOLT	2	
8	36065-460-42	COVER	1	
9	342L0612	FLANGE TAPPING BOLT	3	
10	11006-155	STAY C.P.	1	
11	342L0612	FLANGE TAPPING BOLT	2	
12	11113-407	STAY	1	
13	342L0612	FLANGE TAPPING BOLT	1	
14	11113-292	STAY	1	
15	342L0612	FLANGE TAPPING BOLT	2	
16	36068-196-46	GUARD	1	
17	36080-149	RUBBER SHEET	1	
18	64014-324	SHAFT	1	
19	68013-336	SPRING	1	
20	71082-111	FAN ASS'Y	1	
21	51125-103	FAN	1	
22	11102-151	HOLDER	1	
23	31062-169	PRE-COAT LOCK BOLT	4	
24	579L0600	FLANGE NUT	4	
25	61024-208	SPACER	1	
26	91014-204	BLADE	1	
27	31057-197	BOLT	2	
28	31057-243	BOLT	4	
29	61024-142	SPACER	3	
30	71067-106	BRAKE A'Y(BBC530-KAZ	1	
32	91097-101	UNIVERSAL JOINT	1	
34	812V2000	C-SNAP RING	1	
35	717B0418	PARALLEL PIN	1	
36	71235-104	TORQUE LIMITER ASS'Y	1	
37	91049-133	CONNECTOR	1	
38	68036-280	WASHER (10.5x18x1.6)	2	
39	816V0800	E-SNAP RING	1	
40	36065-438	COVER	1	
41	342L0616	FLANGE TAPPING BOLT	1	
42	51116-149	HANDLE BRACKET	1	
43	51116-150	HANDLE BRACKET	1	
44	31057-255	BOLT (M8x25)	4	
45	512L0800	HEXAGON NUT	4	
46	11113-408	STAY	2	
47	512L0800	HEXAGON NUT	2	
48	31057-181	BOLT	2	
49	342L0612	FLANGE TAPPING BOLT	2	
52	71008-501	GEAR CASE ASS'Y	1	
55	733L1000	SNAP PIN	1	

8"AI-ROLLER-PRO	*Date :* 1 Mar. 2024	*Revision :* 00	*Page :* 2/2
Brand : KAAZ	*Model :* LM5360HXARD-PRO-HS	*Product Code :* 620677	

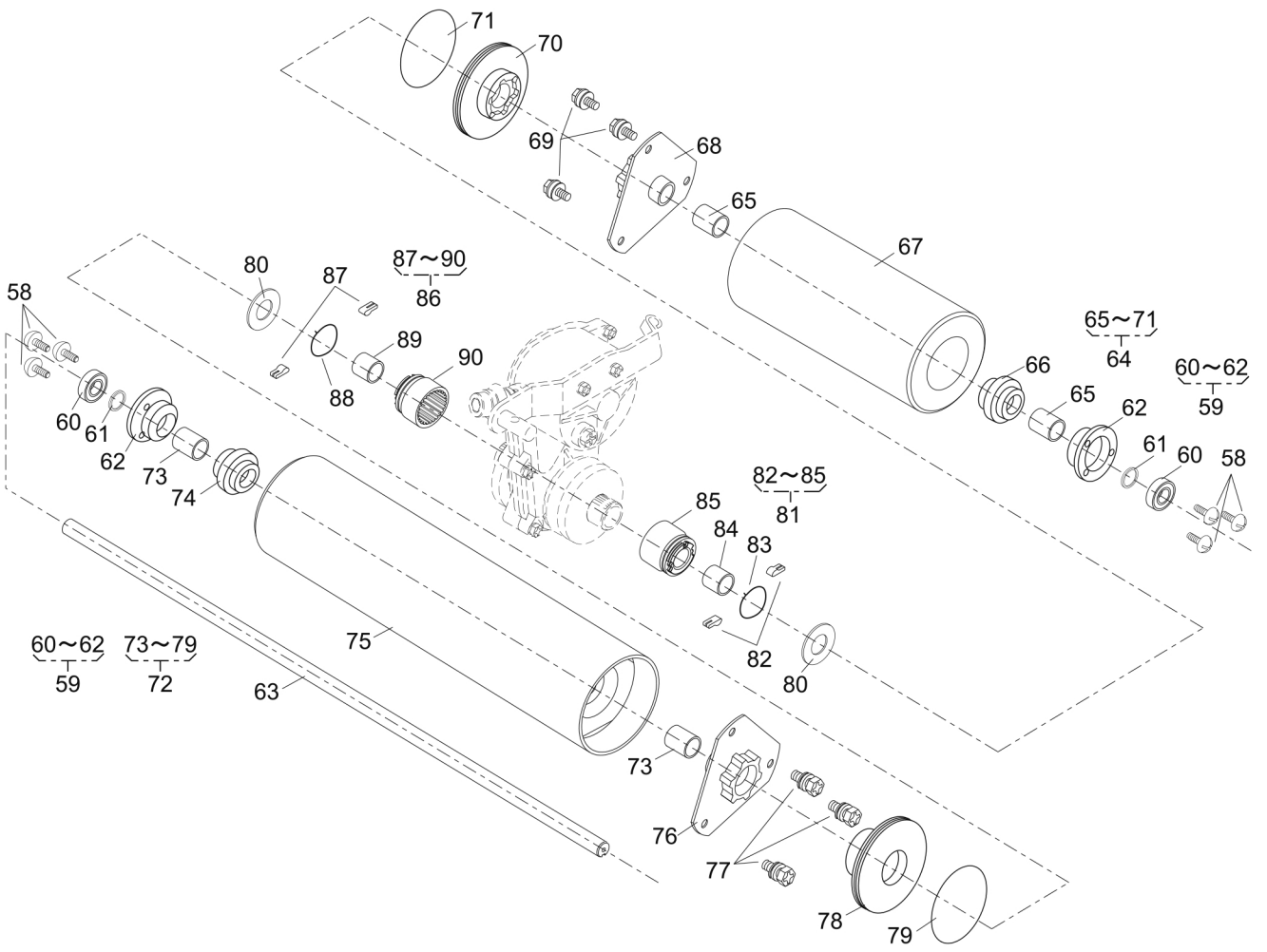

8"Al-ROLLER-PRO LM5360HXARD-PRO-HS

Brand : KAAZ Date : 1-Mar-2024

P.cd : 620677 Revision : 00

Ref.No	Parts.No	Parts.Name	Q'ty	Remarks
58	427M0610	SOCKET SCREW	6	M6×10
59	71907-276	HOLDER ASS'Y	2	
60	76008-135	BEARING	2	
61	61002-215	OIL SEAL	2	
62	11102-257	HOLDER	2	
63	64014-441	SHAFT	1	
64	71907-274	ROLLER ASS'Y(L)	1	
65	76007-222	BUSH	2	
66	61024-266	SPACER	1	
67	36099-140	ROLLER	1	
68	11137-142	BASE C.P.	1	
69	315L0616	HEX. BOLT(W/SW,PW)	3	
70	61024-265	SPACER	1	
71	212B9000	O-RING	1	
72	71907-275	ROLLER ASS'Y(R)	1	
73	76007-222	BUSH	2	
74	61024-266	SPACER	1	
75	36099-141	ROLLER	1	
76	11137-142	BASE C.P.	1	
77	315L0616	HEX. BOLT(W/SW,PW)	3	
78	61024-265	SPACER	1	
79	212B9000	O-RING	1	
80	68036-146	WASHER (16x31.5x1.0)	2	
81	71158-105	RATCHET ASS'Y(L)	1	
82	31034-170	PIN	2	
83	68013-439	SPRING	1	
84	76007-221	BUSH	1	
85	71285-121	HOLDER C.P.	1	
86	71158-106	RATCHET ASS'Y(R)	1	
87	31034-170	PIN	2	
88	68013-439	SPRING	1	
89	76007-221	BUSH	1	
90	71285-121	HOLDER C.P.	1	

8"AI-ROLLER-PRO	*Date :* 1 Mar. 2024	*Revision :* 00	*Page :* 1/2
Brand : KAAZ	*Model :* LM5360HXARD-PRO-HS	*Product Code :* 620677	

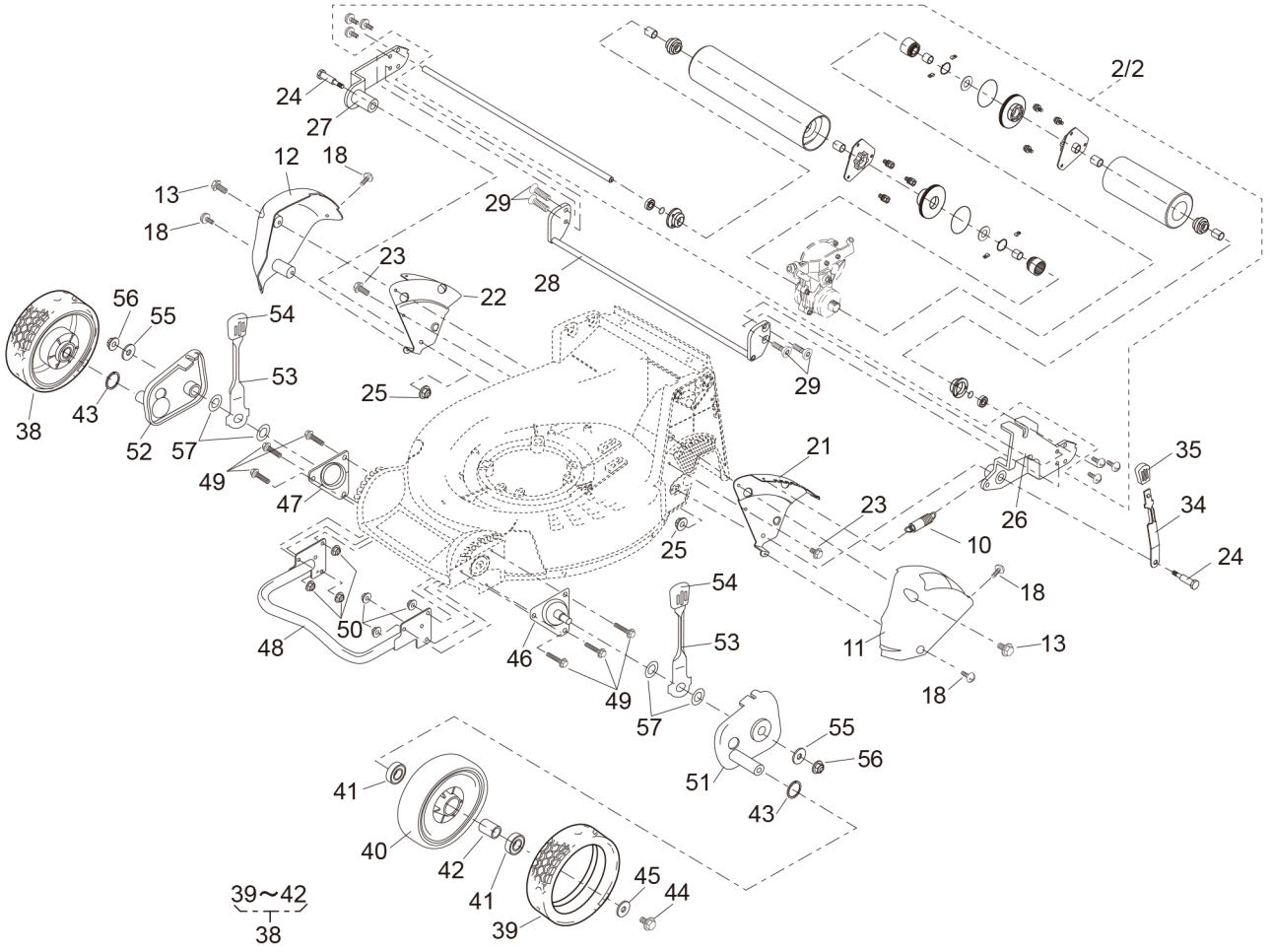

8"Al-ROLLER-PRO LM5360HXARD-PRO-HS

Brand : KAAZ Date : 1-Mar-2024

P.cd : 620677 Revision : 00

Ref.No	Parts.No	Parts.Name	Q'ty	Remarks
10	68013-265	SPRING	1	
11	36065-444	COVER	1	
12	36065-445	COVER	1	
13	342L0616	FLANGE TAPPING BOLT	2	
18	475L0516	(+)TAPPING SCREW	4	
21	11113-411	STAY	1	
22	11113-412	STAY	1	
23	342L0612	FLANGE TAPPING BOLT	2	
24	31057-261	BOLT	2	
25	569L0800	FLANGE NYLON NUT	2	
26	11142-146	ADJUSTER	1	
27	11142-147	ADJUSTER	1	
28	71267-107	JOINT PIPE C.P.	1	
29	417M0812	SOCKET SCREW	4	M8×12
34	11150-108-09	ADJUST LEVER	1	
35	36061-121	KNOB	1	
38	71041-135	WHEEL ASS'Y	2	
39	91086-113	TIRE	2	
41	916B6002	BEARING (6002DDC3)	4	
42	11083-332	COLLAR	2	
43	51113-119	RING	2	
44	31057-181	BOLT	2	
45	68036-101	WASHER (9x25x2.3)	2	
46	11006-203	STAY C.P.	1	
47	11006-204	STAY C.P.	1	
48	11153-112-09	BUMPER	1	
49	31057-351	BOLT	6	
50	569L0600	FLANGE NYLON NUT	6	
51	11142-129	ADJUSTER	1	
52	11142-130	ADJUSTER	1	
53	11150-109-09	ADJUST LEVER	2	
54	36061-121	KNOB	2	
55	68036-101	WASHER (9x25x2.3)	2	
56	31058-176	HEXAGON NUT	2	
57	68013-393	SPRING	4	

GEAR CASE ASS'Y	Date : 23 Jan. 2024	Revision : 00	Page: 1/1
Product code : 71008-501		Model :	

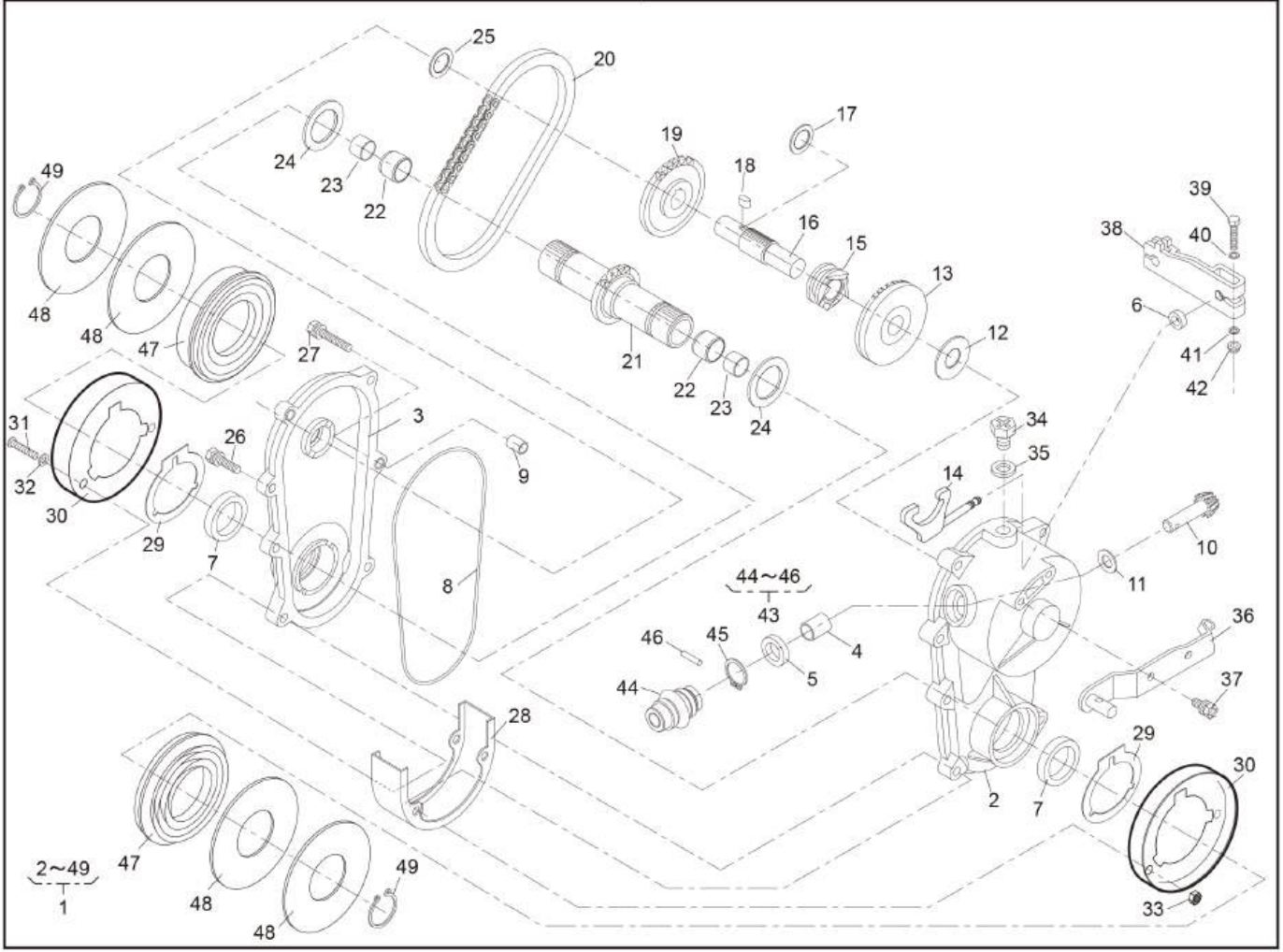

GEAR CASE ASS'Y

Brand:

Date: 1-Mar-2024

P.cd: 71008-501

Revision: 00

Ref.No	Parts.No	Parts.Name	Q'ty	Remarks
1	71008-501	GEAR CASE ASS'Y	1	
2	51001-279	GEAR CASE	1	
3	51001-280	GEAR CASE	1	
4	76007-167	BUSH	1	
5	61002-161	OIL SEAL (SD10205)	1	
6	61002-162	OIL SEAL (SD08144)	1	
7	61002-188	OIL SEAL (SD28386)	2	
8	214B1350	O-RING (S-135)	1	
9	11083-201	COLLAR	2	
10	78003-136	PINION	1	
11	61003-109	THRUST PLATE	1	φ10.1×φ19×t1
12	61003-123	THRUST PLATE	1	φ16.2×φ36×t1
13	78001-189	BEVEL GEAR	1	
14	11097-119	SHIFTER FORK	1	
15	11129-118	CLUTCH	1	
16	64014-408	SHAFT	1	
17	68036-328	WASHER (16.1x21xt1.5)	1	
18	91020-165	KEY	1	
19	36112-153	SPROCKET	1	
20	91074-107	CHAIN	1	
21	64014-405	SHAFT	1	
22	61023-221	SLEEVE	2	φ17×φ21×L15
23	76007-221	BUSH	2	φ15×φ17×L15
24	61024-171	SPACER	2	φ28.2×φ36×t1
25	61024-118	SPACER	1	φ16.2×φ24×t1
26	315L0625	HEXAGON BOLT (W/SW,PW)	3	
27	315L0630	HEXAGON BOLT (W/SW,PW)	2	
28	36065-507	COVER	1	
29	36080-186	RUBBER SHEET	2	
30	11004-145	GRASS COVER	2	
31	427L0635	SOCKET SCREW	2	
32	611L0600	PLAIN WASHER	2	
33	562L0600	U-HEXAGON NUT	2	
34	31057-262	BOLT	1	
35	68001-110	FIBER WASHER	1	
36	11006-148	STAY C.P.	1	
37	315L0616	HEXAGON BOLT (W/SW,PW)	2	
38	11104-169	ARM	1	
39	311M0630	HEXAGON BOLT	1	
40	611L0600	PLAIN WASHER	1	
41	613L0600	PLAIN WASHER	1	
42	571L0600	FLANGE NUT	1	
43	91097-101	UNIVERSAL JOINT	1	
45	812V2000	C-SNAP RING	1	
46	717B0418	PARALLEL PIN	1	
47	61019-257	PACKING	2	
48	61003-131	THRUST PLATE	4	φ28.5xφ82x t 1.0
49	812V2800	C-SNAP RING	2	

HANDLE-ROLLER-PRO	*Date :* 1 Mar. 2024	*Revision :* 00	*Page :* 1/1
Brand : KAAZ	*Model :* LM5360HXARD-PRO-HS	*Product Code :* 620677	

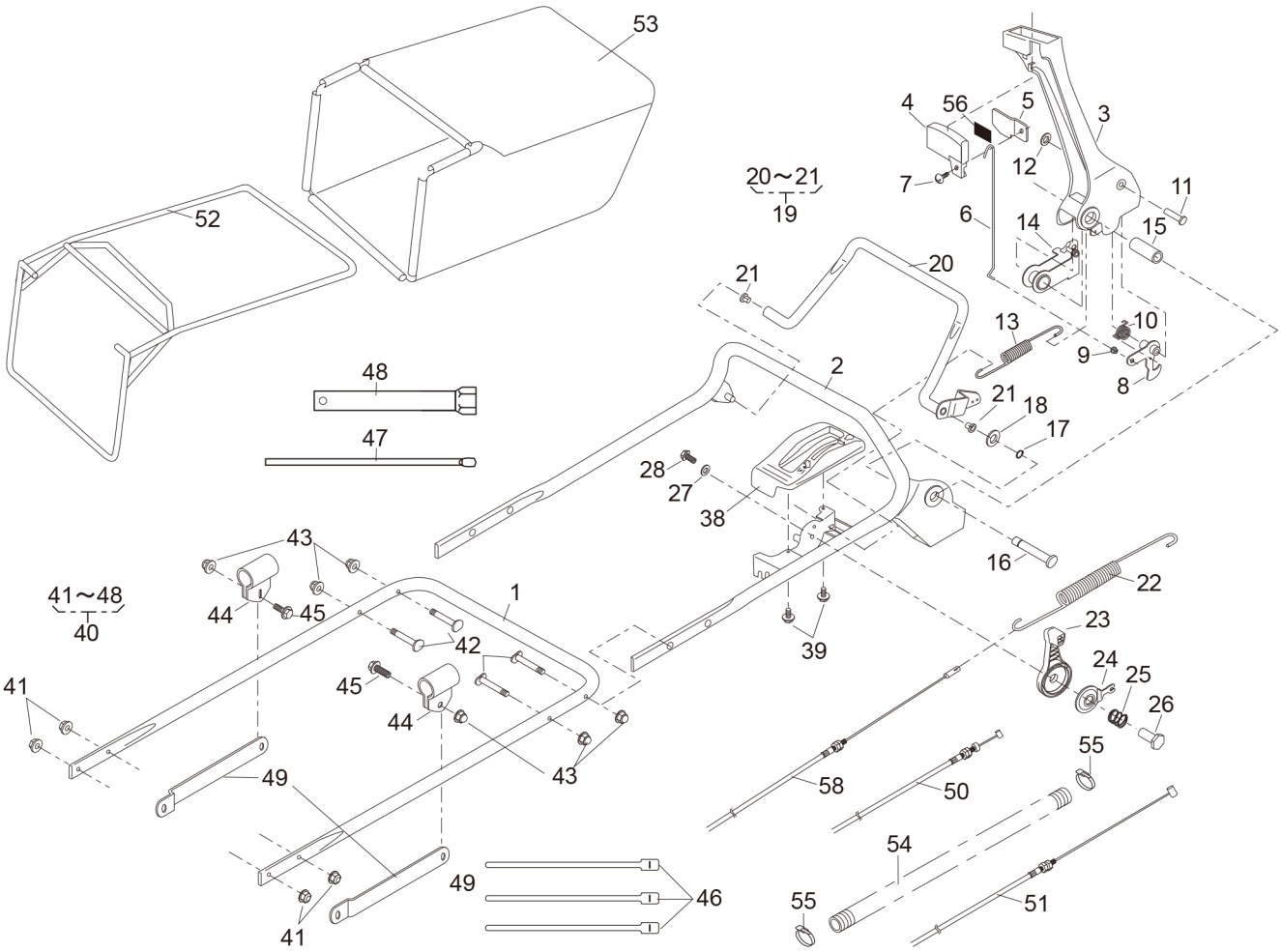

HANDLE-ROLLER-PRO LM5360HXARD-PRO-HS

Brand: KAAZ Date: 1-Mar-2024

P.cd: 620677 Revision: 00

Ref.No	Parts.No	Parts.Name	Q'ty	Remarks
1	51027-268-103	HANDLE	1	
2	51027-269-103	HANDLE	1	
3	11095-172	LEVER	1	
4	36110-102	BUTTON	1	
5	11049-109	SLIDE PLATE	1	
6	64014-336	SHAFT	1	
7	376L0612	(+)TRUSS SCREW	1	
8	71203-135	ARM C.P.	1	
9	76007-183	BUSH	1	
10	68013-371	SPRING	1	
11	31056-127	GIB-HEADED PIN	1	
12	576V0600	PUSH NUT	1	
13	68013-392	SPRING	1	
14	11109-111	LINK	1	
15	61023-190	SLEEVE	1	
16	64014-337	SHAFT	1	
17	812V0800	C-SNAP RING	1	
18	613L0800	PLAIN WASHER	1	
19	71161-114-09	LEVER ASS'Y	1	
21	76007-131	BUSH	2	
22	68013-382	SPRING	1	
23	91010-169	THROTTLE LEVER	1	
24	61003-113	THRUST PLATE	1	
25	68013-356	SPRING	1	
26	31058-168	HEXAGON NUT	1	
27	68036-125	WASHER (6.5x18x1.6)	1	
28	318L0612	(+)HEX. BOLT(W/SW)	1	
38	71900-797	COVER ASS'Y	1	
39	470L0514	(+)TAPPING SCREW	2	
40	71906-525	ACCESSORIES	1	
41	569L0800	FLANGE NYLON NUT	4	
42	31057-256	BOLT	4	
43	583L0800	FLANGE CAP NUT	6	
44	11012-132	HANGER BAND	2	
45	31057-181	BOLT	2	
46	68028-118	WIRE BAND (GT280)	3	
47	66008-103	PLUG BOX BAR (8x200)	1	
48	66006-125	BOX SPANNER	1	
49	71900-846	BAR SET	1	
50	91001-329	THROTTLE WIRE	1	
51	91003-169	CONTROL CABLE	1	
52	11062-178-09	FRAME C.P.	1	
53	36098-177	GRASS BAG C.P.	1	
54	41003-201	TUBE (15.6x800L)	1	
55	68028-119	WIRE BAND (SHT18R-W)	2	
56	36080-156	RUBBER SHEET	1	
58	91003-165	CONTROL CABLE	1	